REVISIONS				
REV. SYM.	E.C.O. NUMBER	DESCRIPTION	BY DATE	APP'D DATE
3		REVISED NOTE 1	JWJ 2/23/06	RRR 2/23/06

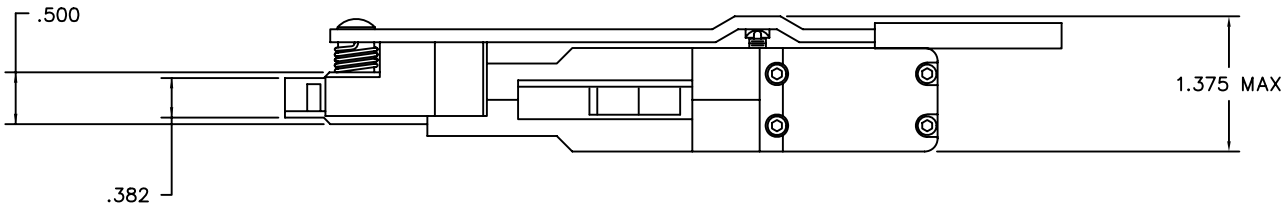

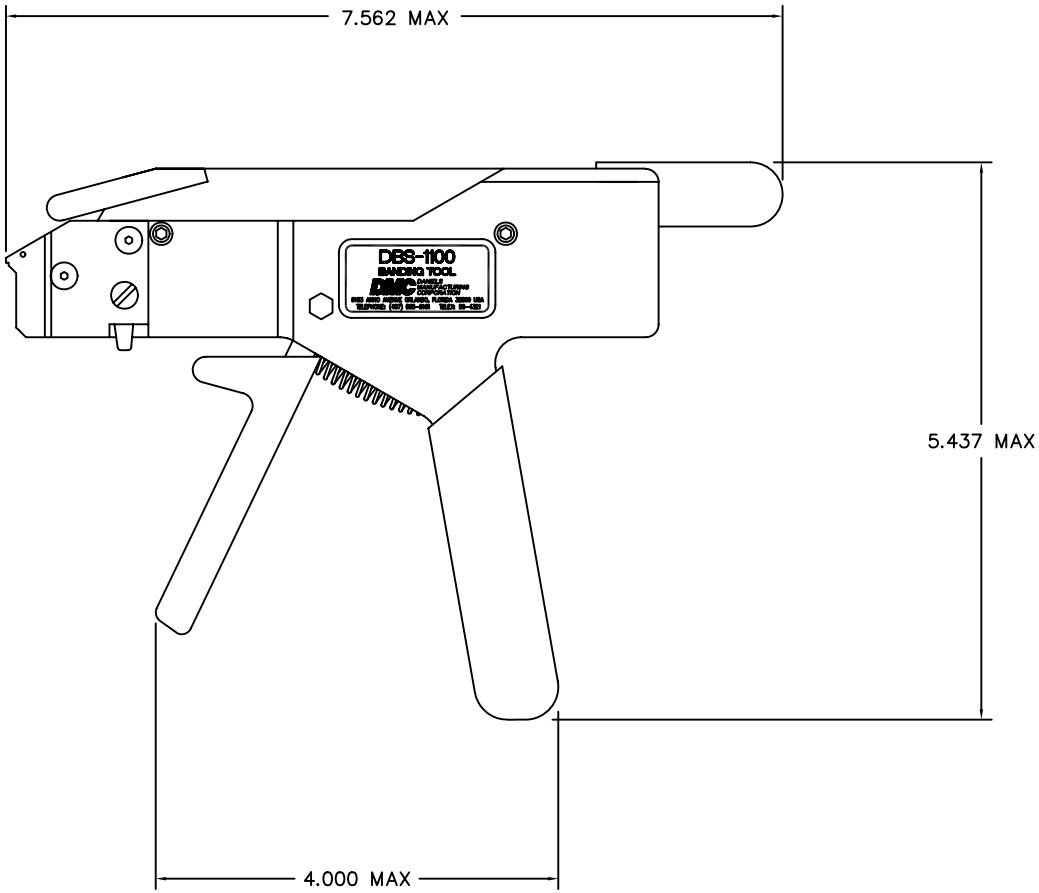

UNCONTROLLED DOCUMENT WILL NOT BE UPDATED

NOTES:

1. TOOL CALIBRATION: SET AT 150±10 LBS. USING CALIBRATION GAGE DBS–CG1.
2. USES 1/4" WIDE BANDS (DMC P/N 4–1380).

RESTRICTED & CONFIDENTIAL

CONFIDENTIAL PROPERTY OF DANIELS MANUFACTURING CORP. NOT TO BE DISCLOSED TO OTHERS, REPRODUCED OR USED FOR ANY OTHER PURPOSE, EXCEPT AS AUTHORIZED IN WRITING BY DANIELS MANUFACTURING. MUST BE RETURNED TO DANIELS MANUFACTURING CORP. ON COMPLETION OF ORDER OR OTHER PURPOSE FOR WHICH LENT.

DO NOT SCALE DRAWING

MATERIAL

HEAT TREAT

FINISH

ITEM	PART NO.	QTY.	DESCRIPTION/REMARKS

DRN. T.STANFILL DATE 3-16-90

CHK'D. DATE

APP'D. MGS DATE 3-16-90

APP'D. DATE

NOTE: THIS DRAWING IS AN OUTLINE DRAWING OF THE RESPECTIVE DMC PART NUMBER INDICATED. ACTUAL DMC PART NUMBER IS DRAWING NUMBER WITHOUT THE "–ENV" SUFFIX.

DMC DANIELS MANUFACTURING CORP. ORLANDO, FLORIDA CAGE 11851

TITLE MANUAL BANDING TOOL

WHERE USED:

SIZE	SCALE	CAD FILE NO	SHEET OF
C	NTS	DBS–1100–ENV	1 1

POSTING

DWG. NO.	REV.
DBS–1100–ENV	3